NOTES:
1. MATERIALS AND FINISHES:
   BODY - BRASS, GOLD OVER WHITE BRONZE PLATING
   CONTACT - BeCu, GOLD OVER WHITE BRONZE PLATING
   INSULATOR - PTFE
2. ELECTRICAL:
   A. IMPEDANCE: 50 OHM
   B. FREQUENCY RANGE: DC - 6 GHz
   C. VSWR(RETURN LOSS): 1.05 (32 dB) TO 3 GHz
      1.10 (26 dB) TO 6 GHz
   D. DIELECTRIC WITHSTANDING VOLTAGE: 1000 VRMS, MIN.
3. MECHANICAL:
   A. DURABILITY: 500 CYCLES MIN.
   B. TEMPERATURE RANGE: -65° C TO 165° C
4. PACKAGING:
   A. QUANTITY: SINGLE PACK
   B. MARKING: BAG TO BE MARKED
      "AMPHENOL, 930-116J-51P, AND DATE CODE"

930-116J-51P	REVISIONS				
DRAWING NO.	REV	DESCRIPTION	DATE	ECO	APPR
THIRD ANGLE PROJ.	A	RELEASE TO MFG.	1/28/04	44774	KJC

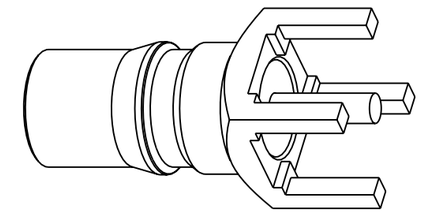

SCALE 4.000

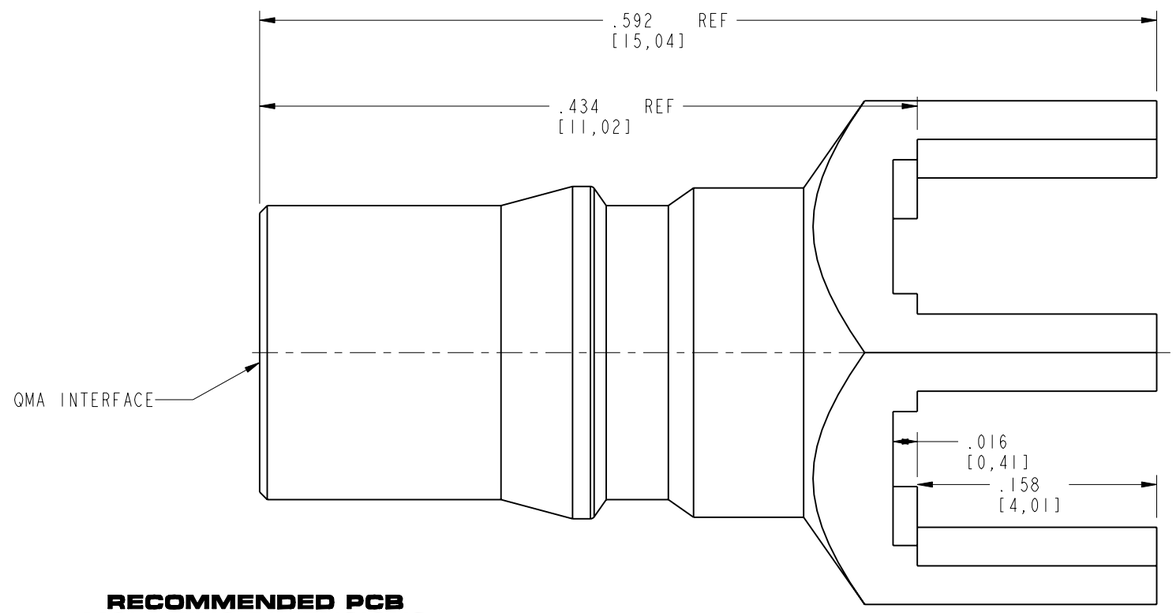

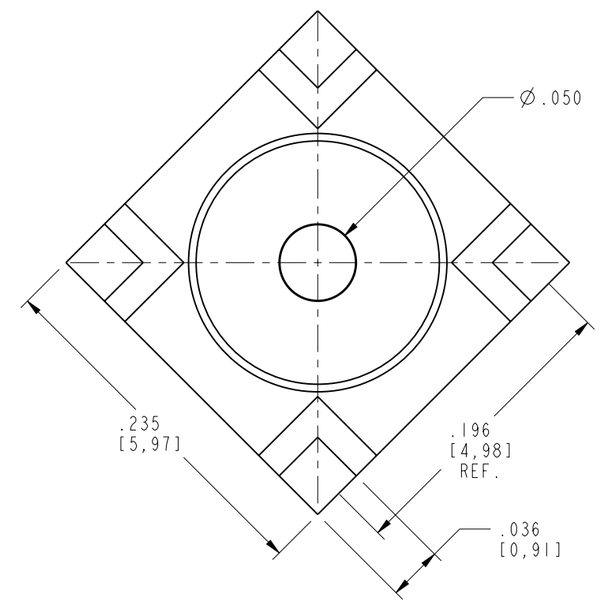

RECOMMENDED PCB MOUNTING DIMENSIONS

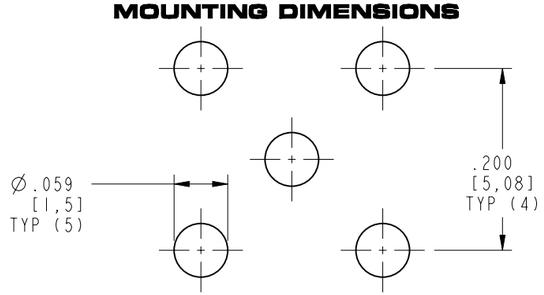

CUSTOMER OUTLINE DRAWING

ALL OTHER SHEETS ARE FOR INTERNAL USE ONLY

UNLESS OTHERWISE SPECIFIED, DIMENSIONS ARE IN INCHES AND TOLERANCES ARE:

2 PLACE DECIMAL	3 PLACE DECIMAL	ANGLES
±.015 (0,381 mm)	±.005 (0,127 mm)	± 1°

NOTICE - These drawings, specifications, or other data (1) are, and remain the property of Amphenol Corp. (2) must be returned upon request; and (3) are confidential and not to be disclosed to any person other than those to whom they are given by Amphenol Corp. The furnishing of these drawings, specifications, or other data by Amphenol Corp., or to any other person to anyone for any purpose is not to be regarded by implication or otherwise in any manner licensing, granting rights or permitting such holder or any other person to manufacture, use or sell any product, process or design, patented or otherwise, that may in any way be related to or disclosed by said drawings, specifications, or other data.

MATERIAL

REFERENCE
EAR #978
ASSYF5_QMA
615X-1933-100

DRAWN K. CAPOZZI	DATE 21-May-03	TITLE QMA (F) STR TO PCB
ENGINEER K. CAPOZZI	DATE 21-May-03	
APPROVED O. BARTHELMES	DATE 1/28/04	

CAD FILE I:\QMA\930-116J-51P

Amphenol RF
Danbury, CT, USA
Tainan, Taiwan
Shenzhen, China
www.amphenolrf.com

SCALE: 10.0:1 | SHEET 2 OF 2

CODE ID	DWG SIZE	DRAWING NO.	REV
74868	B	930-116J-51P	A